REVISION HISTORY					
ECO	ZONE	REV.	DESCRIPTION	DATE	APPR'D
		A	INITIAL RELEASE	12/7/2018	MRW
		B	UPDATED EYEBOLT CALLOUT AND ADDED NOTE FOR PANEL LIFTING PROCEDURE	9/16/2019	MRW

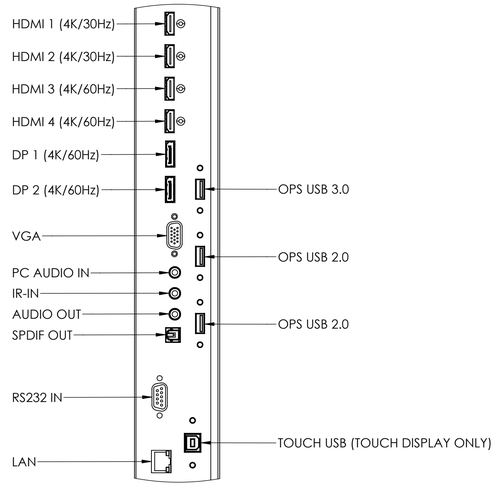

DETAIL A
SCALE 1 : 2

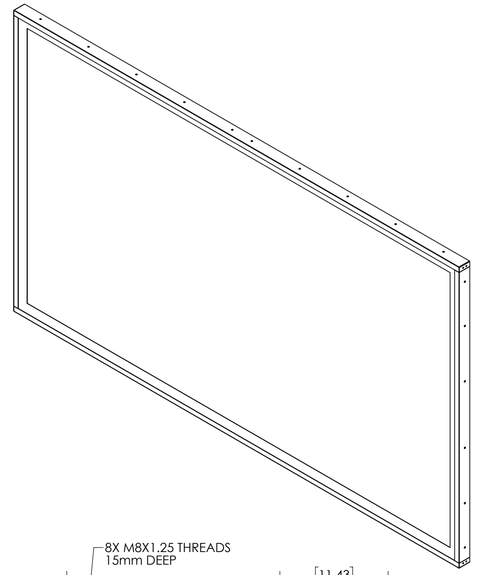

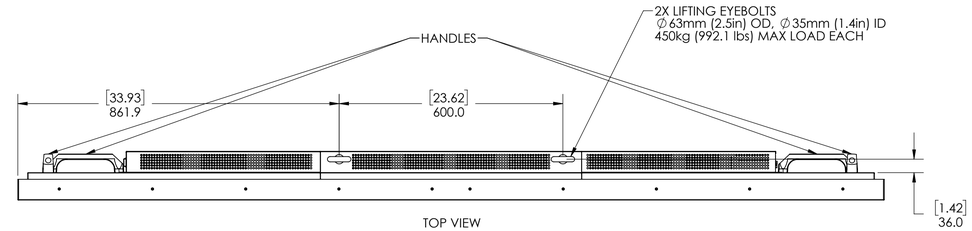

TOP VIEW

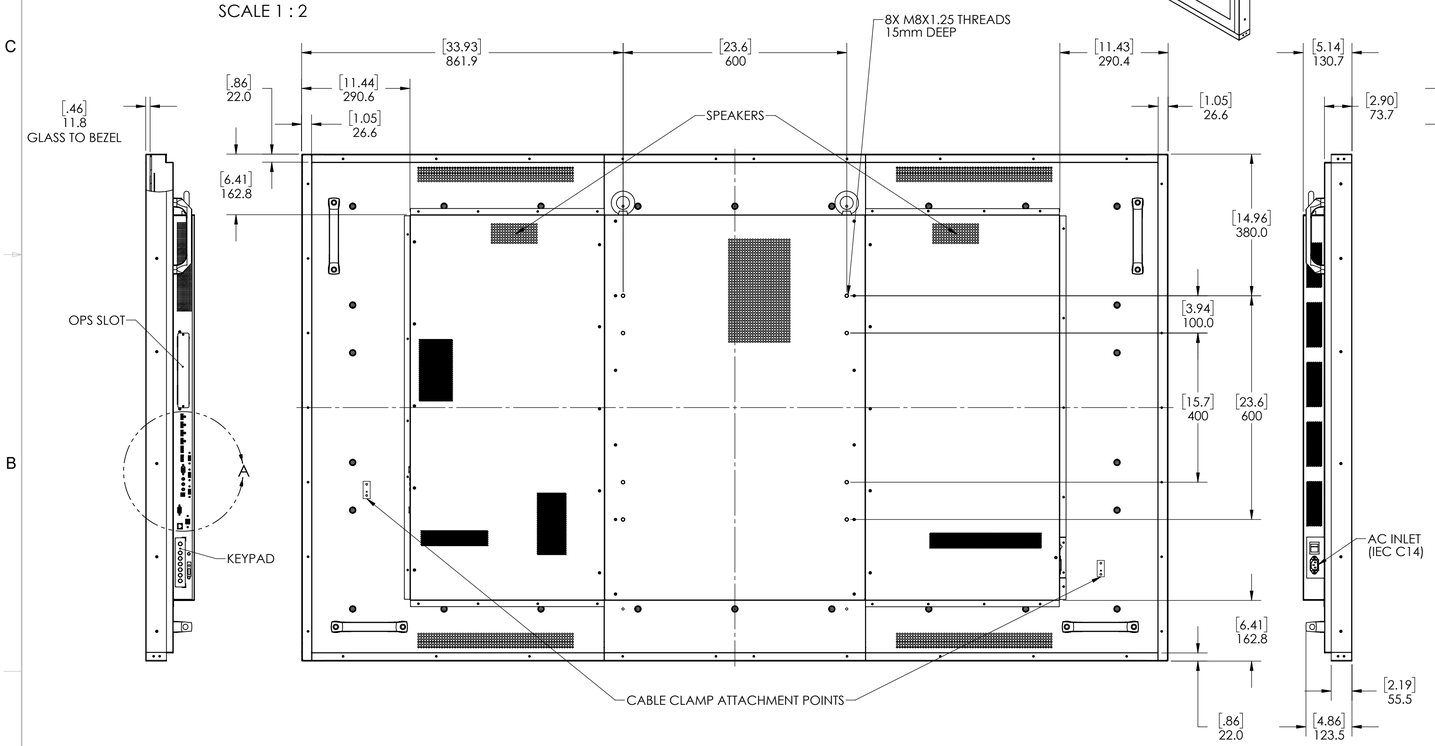

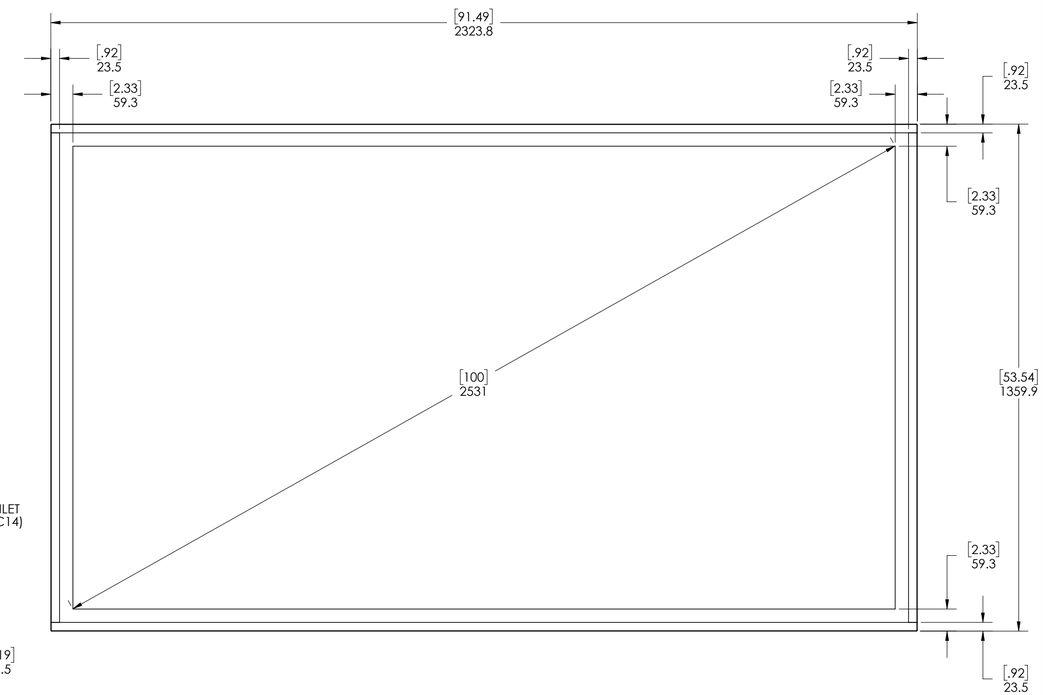

4. USE SPREADER BAR OR MAINTAIN GREATER THAN 45° IF USING SINGLE POINT LIFT.

3. PORTRAIT ORIENTATION IS ROTATED 90° CLOCKWISE AS VIEWED FROM THE FRONT.

2. KEEP PERFORATION AREAS CLEAR FOR VENTILATION.

1. SPECIFICATIONS SUBJECT TO CHANGE WITHOUT NOTICE.

NOTES: UNLESS OTHERWISE SPECIFIED.

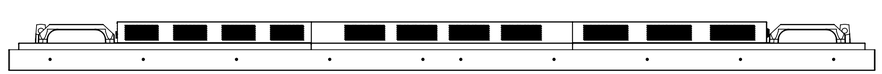

BOTTOM VIEW

UNLESS OTHERWISE SPECIFIED
DIMENSIONS ARE IN MILLIMETERS [INCHES]

TOLERANCES:

X= ±1 XX= ±.25

X= ±.5 ∠= ±1°

DIMENSIONING AND TOLERANCING PER ASME Y14.5M-1994

THIRD ANGLE PROJECTION

ENGR BY		
DRAWN BY	MRW	28NOV18
CHECKED BY		
USED ON		
MATERIAL		
FINISH		

LEYARD PLANAR

PLANAR SYSTEMS, INC.
1195 NE COMPTON DRIVE
HILLSBORO, OR 97006 USA

TITLE: EPX100-T 998-0870-00

SIZE	PART NO.	DRAWING NO.	REV
D	-	EPX100-T OUTLINE	B

SCALE 1:8 DO NOT SCALE SHEET 1 OF 1

THIS DRAWING CONTAINS INFORMATION PROPRIETARY TO PLANAR SYSTEMS, INC. ANY REPRODUCTION IN PART OR WHOLE WITHOUT THE WRITTEN PERMISSION OF PLANAR SYSTEMS IS PROHIBITED. THIS DRAWING IS SUPPLIED FOR INFORMATION, IDENTIFICATION, ENGINEERING, EVALUATION, AND/OR INSPECTION PURPOSES ONLY AND MAY NOT BE USED AS BASIS FOR THE MANUFACTURING OF PRODUCTS OR THE FURNISHING OF SERVICES TO PLANAR SYSTEMS OR TO ANY THIRD PARTY UNLESS AUTHORIZED IN WRITING BY PLANAR SYSTEMS.