REVISION HISTORY					
ECO	ZONE	REV.	DESCRIPTION	DATE	APPR'D

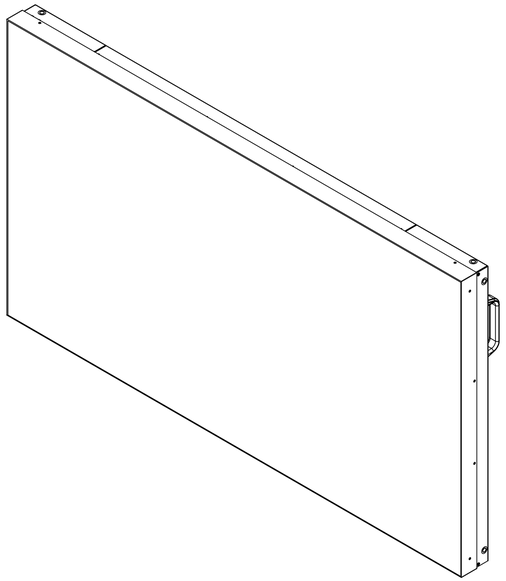

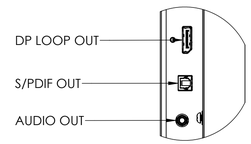

DETAIL A
SCALE 1 : 2

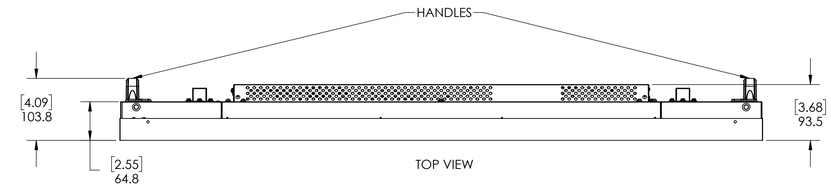

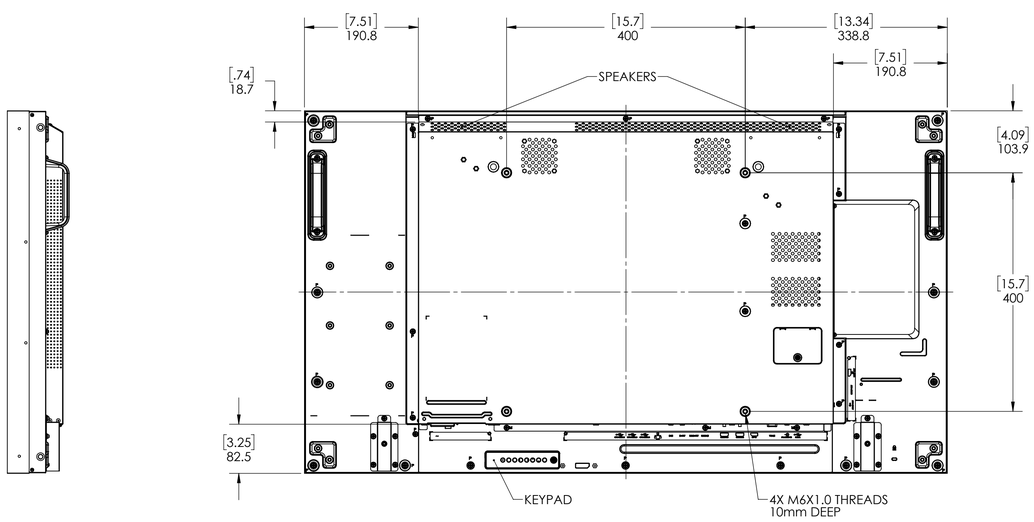

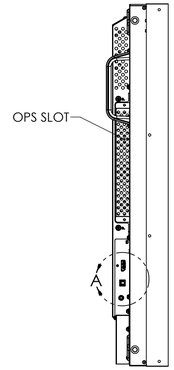

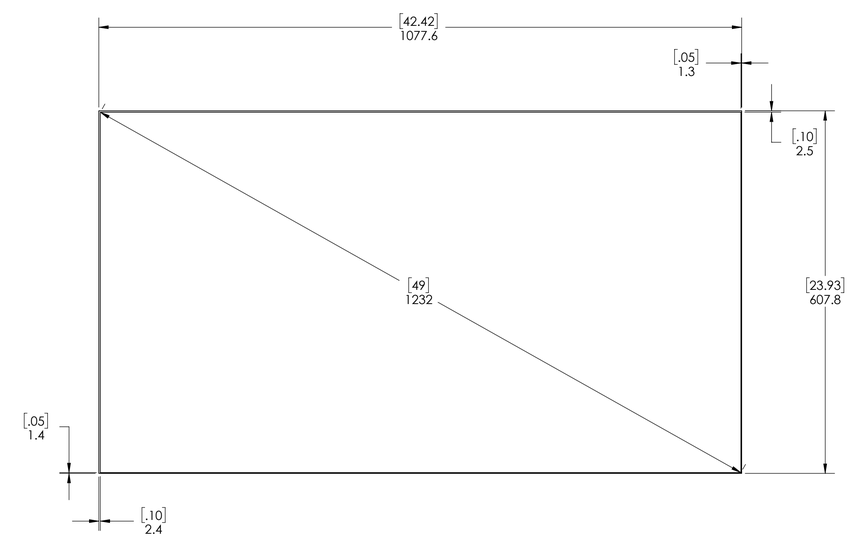

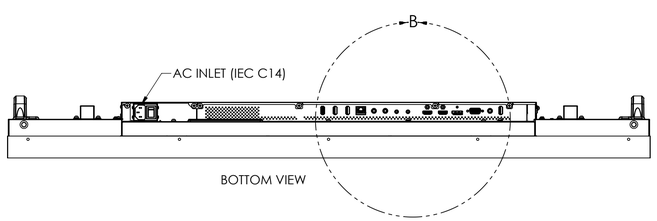

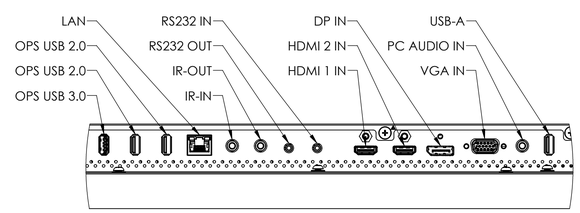

DETAIL B
SCALE 1 : 2

3. PORTRAIT ORIENTATION IS ROTATED 90° CLOCKWISE AS VIEWED FROM THE FRONT.

2. KEEP PERFORATION AREAS CLEAR FOR VENTILATION.

1. SPECIFICATIONS SUBJECT TO CHANGE WITHOUT NOTICE.

NOTES: UNLESS OTHERWISE SPECIFIED.

UNLESS OTHERWISE SPECIFIED:
DIMENSIONS ARE IN MILLIMETERS [INCHES].

TOLERANCES:

X= ±1 XX= ±.25

X= ±.5 ∠= ±1°

DIMENSIONING AND TOLERANCING PER ASME Y14.5M-1994

THIRD ANGLE PROJECTION

ENGR BY		
DRAWN BY	MRW	20MAY19
CHECKED BY		
USED ON		
MATERIAL		
FINISH		

LEYARD PLANAR

PLANAR SYSTEMS, INC.
1195 NE COMPTON DRIVE
HILLSBORO, OR 97006 USA

TITLE: VM49LX-U

SIZE	PART NO.	DRAWING NO.	REV
D	-	VM49LX-U OUTLINE	A

SCALE 1:5 DO NOT SCALE SHEET 1 OF 3

THIS DRAWING CONTAINS INFORMATION PROPRIETARY TO PLANAR SYSTEMS, INC. ANY REPRODUCTION IN PART OR WHOLE WITHOUT THE WRITTEN PERMISSION OF PLANAR SYSTEMS IS PROHIBITED. THIS DRAWING IS SUPPLIED FOR INFORMATION, IDENTIFICATION, ENGINEERING, EVALUATION, AND/OR INSPECTION PURPOSES ONLY AND MAY NOT BE USED AS BASIS FOR THE MANUFACTURING OF PRODUCTS OR THE FURNISHING OF SERVICES TO PLANAR SYSTEMS OR TO ANY THIRD PARTY UNLESS AUTHORIZED IN WRITING BY PLANAR SYSTEMS.

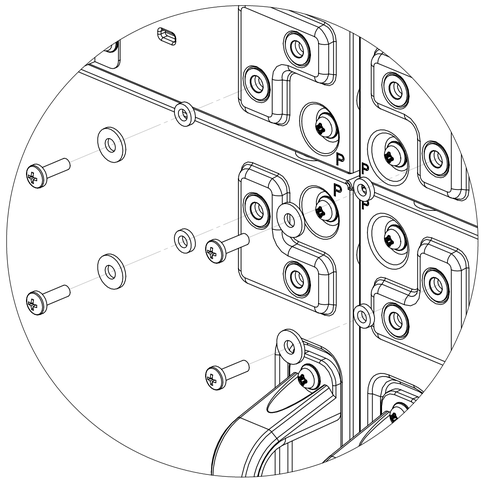

DETAIL C

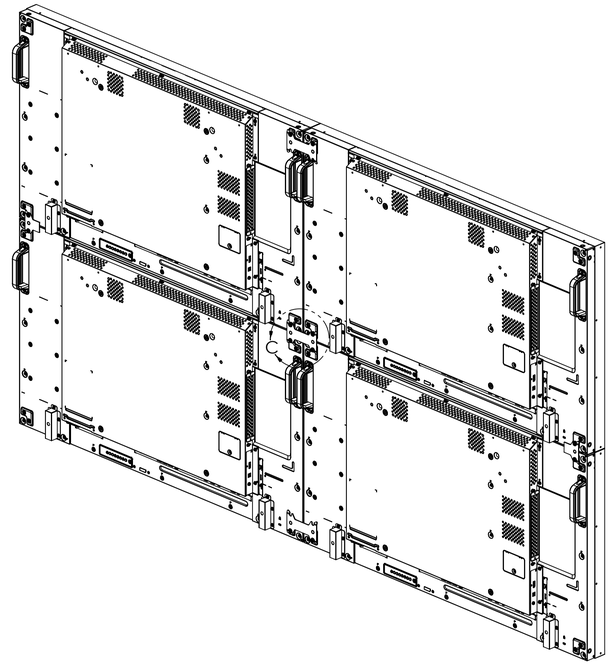

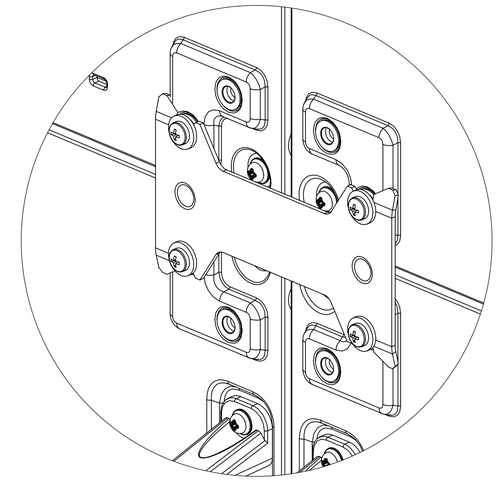

DETAIL C
ALIGNMENT HARDWARE INSTALLED

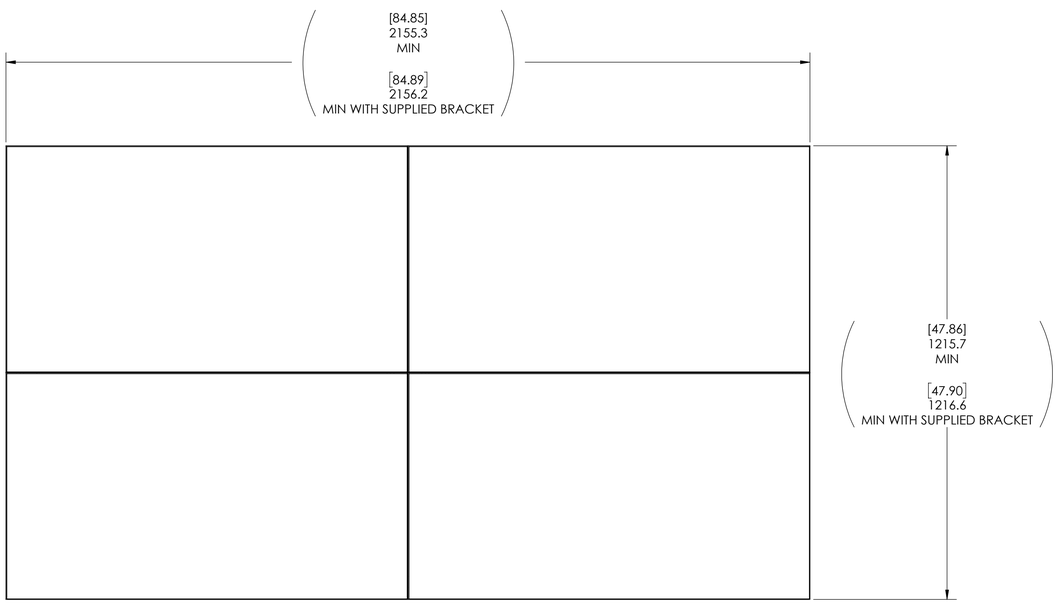

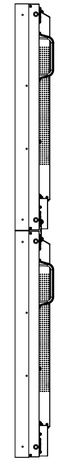

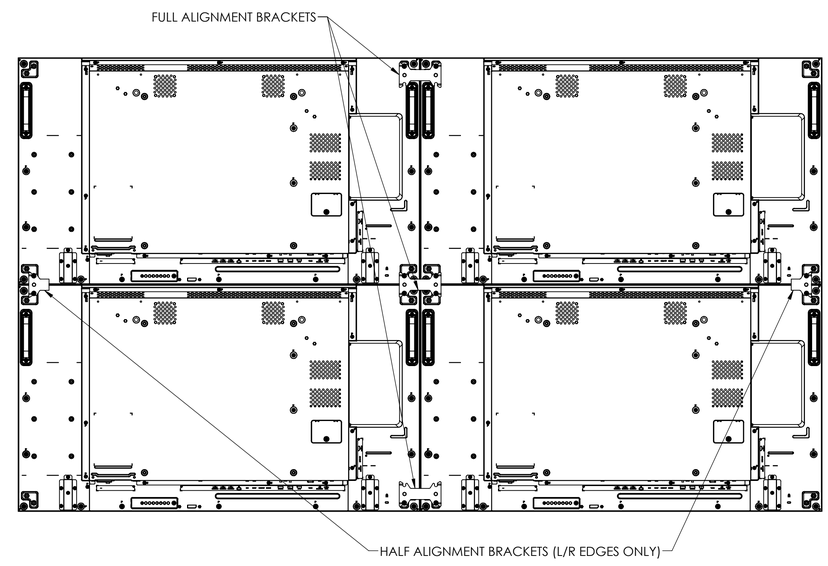

5. RECOMMEND 1.0mm GAP BETWEEN DISPLAYS.

4. ALIGNMENT HARDWARE ATTACHED PRIOR TO PANEL INSTALLATION. BRACKET INSTALLED AFTER TWO HORIZONTAL PANELS HAVE BEEN MOUNTED, ADDITIONAL PANELS SLIDE INTO PLACE.

3. ALIGNMENT BRACKETS SHOWN USED ON NON ADJUSTABLE MOUNTS.

2. KEEP PERFORATION AREAS CLEAR FOR VENTILATION.

1. SPECIFICATIONS SUBJECT TO CHANGE WITHOUT NOTICE.

NOTES: UNLESS OTHERWISE SPECIFIED.

THIS DRAWING CONTAINS INFORMATION PROPRIETARY TO PLANAR SYSTEMS, INC., ANY REPRODUCTION IN PART OR WHOLE WITHOUT THE WRITTEN PERMISSION OF PLANAR SYSTEMS IS PROHIBITED. THIS DRAWING IS SUPPLIED FOR INFORMATION, IDENTIFICATION, ENGINEERING, EVALUATION, AND/OR INSPECTION PURPOSES ONLY AND MAY NOT BE USED AS BASIS FOR THE MANUFACTURING OF PRODUCTS OR THE FURNISHING OF SERVICES TO PLANAR SYSTEMS OR TO ANY THIRD PARTY UNLESS AUTHORIZED IN WRITING BY PLANAR SYSTEMS.

SIZE	PART NO.	DRAWING NO.	REV
D	-	VM49LX-U OUTLINE	A
SCALE 1:5	DO NOT SCALE	SHEET 2 OF 3	

050-0218-02 REV B

TRIM INSTALLATION

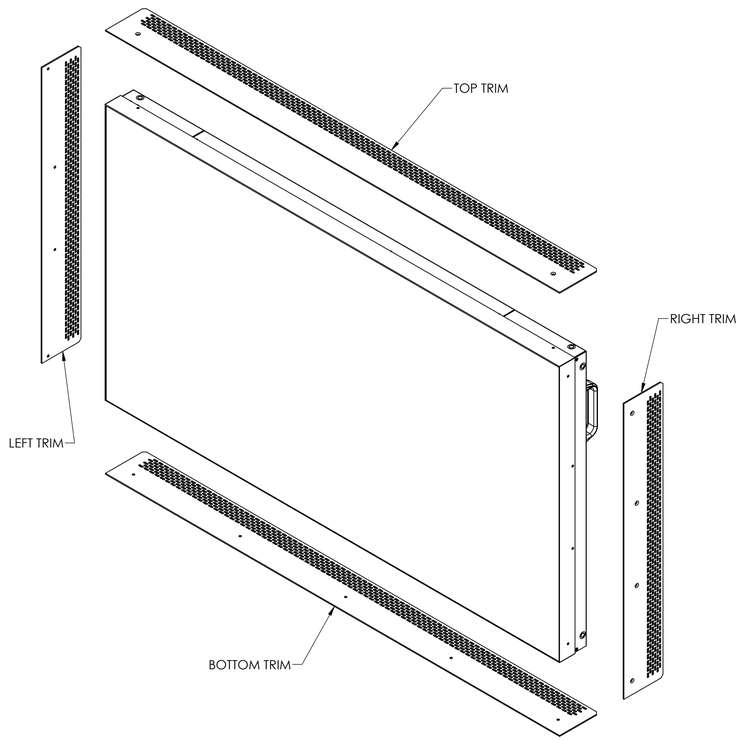

LANDSCAPE: TOP
PORTRAIT: RIGHT

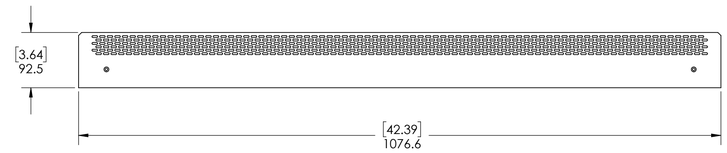

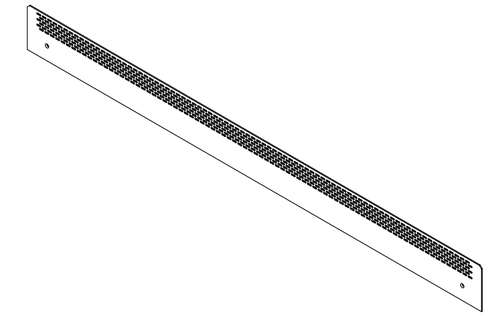

LANDSCAPE: BOTTOM
PORTRAIT: LEFT

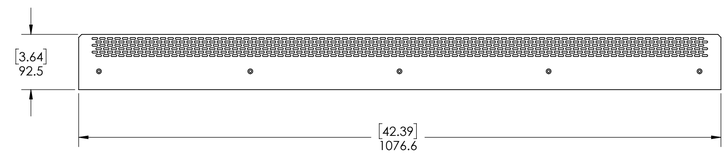

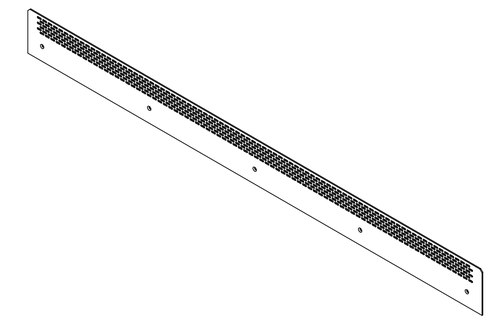

LANDSCAPE: LEFT
PORTRAIT: TOP

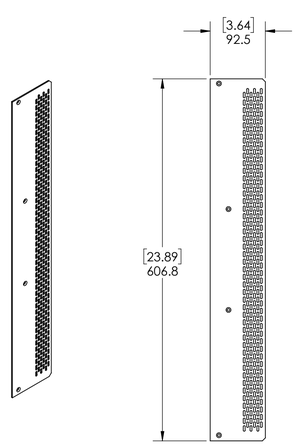

LANDSCAPE: RIGHT
PORTRAIT: BOTTOM

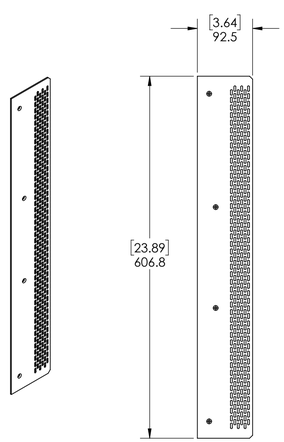

3. TOP, BOTTOM, LEFT, AND RIGHT TRIM ARE 2mm THICK.
2. KEEP PERFORATION AREAS CLEAR FOR VENTILATION.
1. SPECIFICATIONS SUBJECT TO CHANGE WITHOUT NOTICE.

NOTES: UNLESS OTHERWISE SPECIFIED.

THIS DRAWING CONTAINS INFORMATION PROPRIETARY TO PLANAR SYSTEMS, INC. ANY REPRODUCTION IN PART OR WHOLE WITHOUT THE WRITTEN PERMISSION OF PLANAR SYSTEMS IS PROHIBITED. THIS DRAWING IS SUPPLIED FOR INFORMATION, IDENTIFICATION, ENGINEERING, EVALUATION, AND/OR INSPECTION PURPOSES ONLY AND MAY NOT BE USED AS BASIS FOR THE MANUFACTURING OF PRODUCTS OR THE FURNISHING OF SERVICES TO PLANAR SYSTEMS OR TO ANY THIRD PARTY UNLESS AUTHORIZED IN WRITING BY PLANAR SYSTEMS.

SIZE	PART NO.	DRAWING NO.	REV
D	-	VM49LX-U OUTLINE	A
SCALE 1:5	DO NOT SCALE	SHEET 3 OF 3	