REVISION HISTORY					
ECO	ZONE	REV.	DESCRIPTION	DATE	APPR'D
		A	PRODUCT RELEASE	6/1/2015	EJS

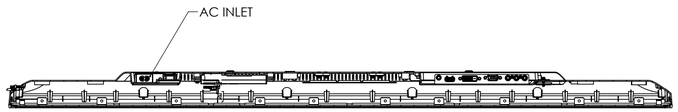

SECTION A-A

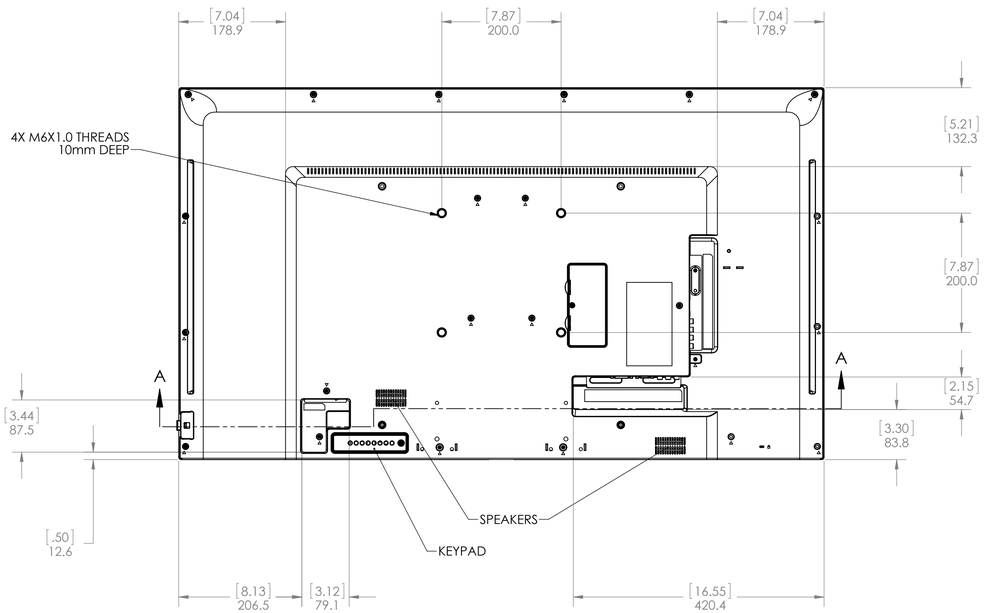

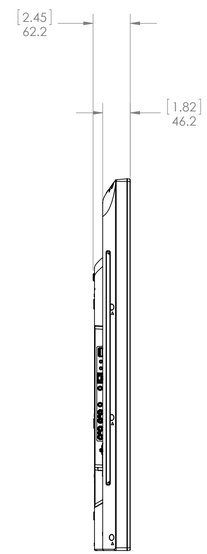

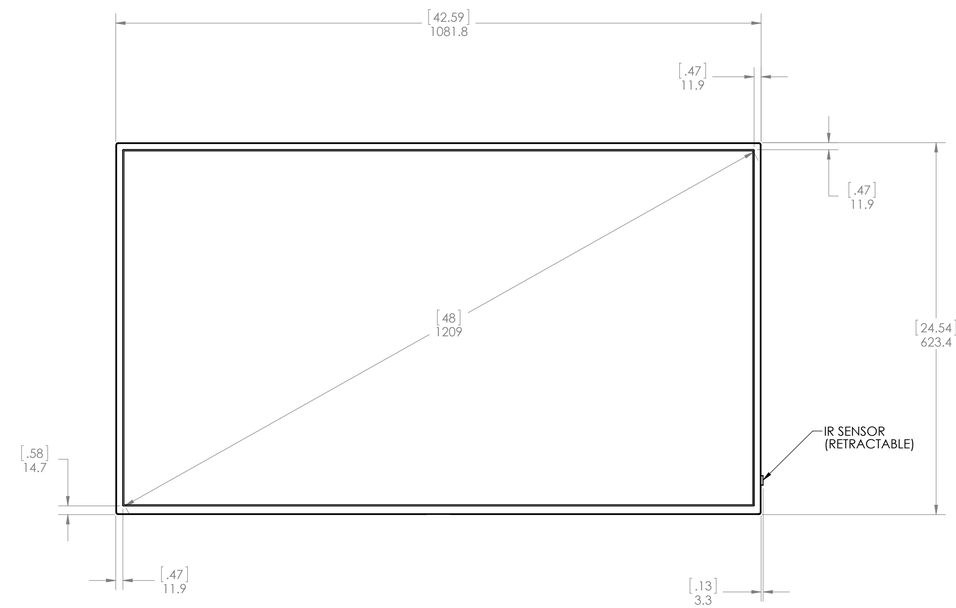

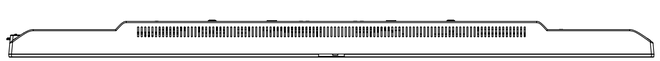

2. KEEP PERFORATION AREAS CLEAR FOR VENTILATION.
1. SPECIFCATIONS SUBJECT TO CHANGE WITHOUT NOTICE

NOTES: UNLESS OTHERWISE SPECIFIED.

UNLESS OTHERWISE SPECIFIED
DIMENSIONS ARE IN MILLIMETERS [INCHES].

TOLERANCES:

X= ±1	XX= ±.25
X= ±.5	∠= ±1°

DIMENSIONING AND TOLERANCING PER ASME Y14.5M-1994

THIRD ANGLE PROJECTION

ENGR BY		
DRAWN BY	EJS	31MAY15
CHECKED BY		
USED ON		
MATERIAL		
FINISH		

PLANAR

PLANAR SYSTEMS, INC.
1195 NW COMPTON DRIVE
BEAVERTON, OR 97006 USA

TITLE: SL4851

SIZE	PART NO.	DRAWING NO.	REV
D	-	SL4851-	

SCALE 1:5 | DO NOT SCALE | SHEET 1 OF 1

THIS DRAWING CONTAINS INFORMATION PROPRIETARY TO PLANAR SYSTEMS, INC., ANY REPRODUCTION IN PART OR WHOLE WITHOUT THE WRITTEN PERMISSION OF PLANAR SYSTEMS IS PROHIBITED. THIS DRAWING IS SUPPLIED FOR INFORMATION, IDENTIFICATION, ENGINEERING, EVALUATION, AND/OR INSPECTION PURPOSES ONLY AND MAY NOT BE USED AS BASIS FOR THE MANUFACTURING OF PRODUCTS OR THE FURNISHING OF SERVICES TO PLANAR SYSTEMS OR TO ANY THIRD PARTY UNLESS AUTHORIZED IN WRITING BY PLANAR SYSTEMS.