REVISIONS					
REV	REF	DESCRIPTION	DATE	REV BY	CHK BY
B	008 (160.80.38)	ADD LOCKING CONNECTOR DIMENSION TO OVERALL THICKNESS DIMENSION.	12/12/96	MSK	PAL
C	023	ADDED DIMMING CONN & BLACK BORDER.	3/31/97	RMJ	PAL
D	122-98	ADDED ROW EXTRUSION OUTSIDE DIMENSIONS.	9/23/98	BMJ	PAL
E	033-00	CHANGED DIMMING CONN OUTLINE TO STRAIGHT.	3/15/00	RLW	DW
F	005-01	EDIT COMPONENT OUTLINE SIZE & ADD DIM.	01/25/01	RLW	
G	ECO-2015	UPDATED TITLEBLOCK	08/25/04	RD	

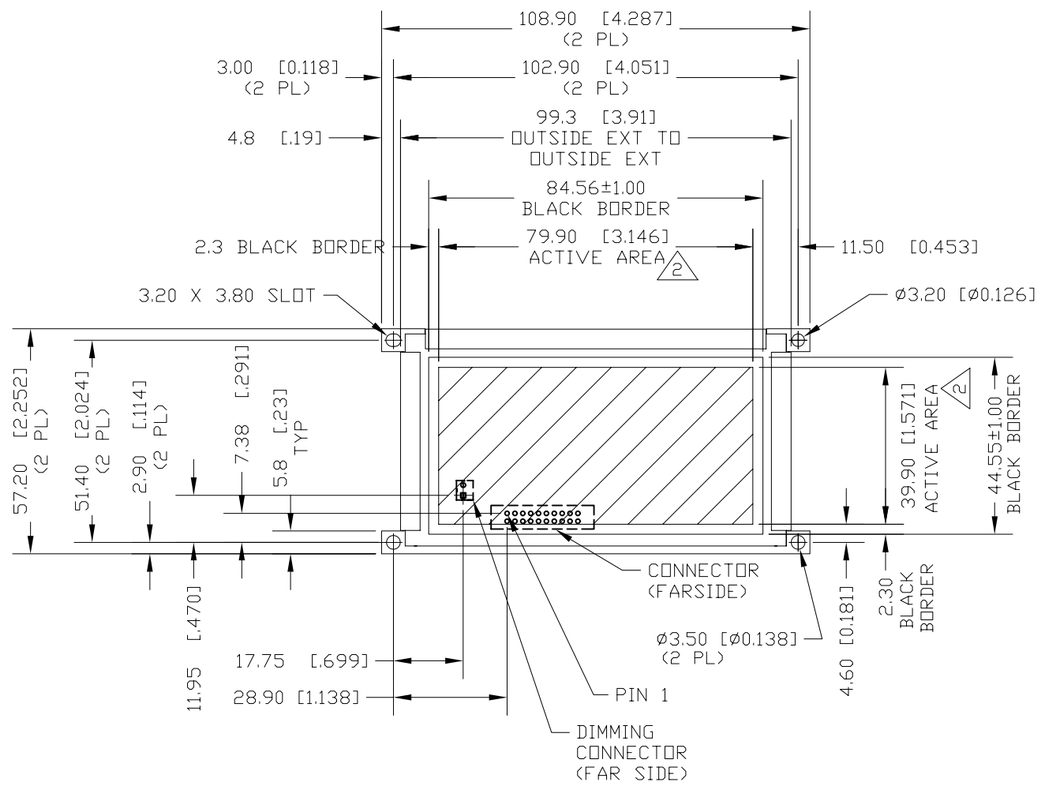

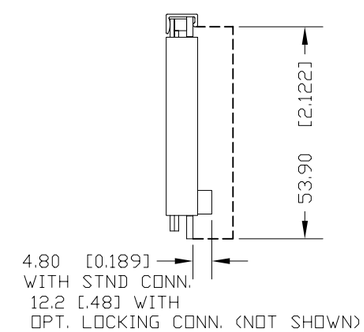

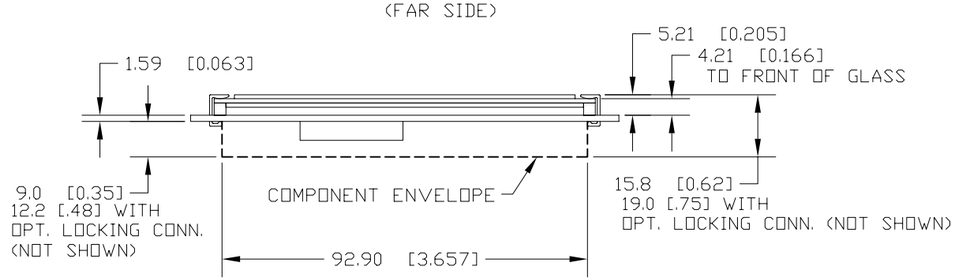

NOTES (UNLESS OTHERWISE SPECIFIED)

1. DIMENSIONS IN MILLIMETERS, INCHES IN BRACKETS.

2 ACTIVE AREA - PIXEL FORMAT: 160 X 80
PIXEL SIZE: .40 [.0157] SQUARE
PIXEL PITCH: .50 [.0197]
DENSITY: 50.8 LINES/INCH
FILL FACTOR: 64.0%

3. SOME HIDDEN LINES REMOVED FOR CLARITY.

THIS DRAWING CONTAINS INFORMATION PROPRIETARY TO PLANAR SYSTEMS, INC., ANY REPRODUCTION IN PART OR WHOLE WITHOUT THE WRITTEN PERMISSION OF PLANAR SYSTEMS IS PROHIBITED. THIS DRAWING IS SUPPLIED FOR INFORMATION, IDENTIFICATION, ENGINEERING, EVALUATION, AND/OR INSPECTION PURPOSES ONLY AND MAY NOT BE USED AS BASIS FOR THE MANUFACTURING OF PRODUCTS OR THE FURNISHING OF SERVICES TO PLANAR SYSTEMS OR TO ANY THIRD PARTY UNLESS AUTHORIZED IN WRITING BY PLANAR SYSTEMS.

UNLESS OTHERWISE SPECIFIED DIMENSIONS ARE IN MILLIMETERS.		ENGR BY M.KRUSKOPF	11/19/96
TOLERANCES:		DRAWN BY M.KRUSKOPF	11/19/96
X = -	.XX = ±.25[.010]	CHECKED BY PAL	11/20/96
.X = ±.50[.020]	ANGLES = -	USED ON 160.80.50	
DIMENSIONING AND TOLERANCING PER ASME Y14.5M-1994		MATERIAL NA	
THIRD ANGLE PROJECTION		FINISH NA	

PLANAR

PLANAR SYSTEMS
1195 NW COMPTON DRIVE
BEAVERTON, OR 97006 USA

TITLE

MECH,OUTLINE,EL160.80.50,FAMILY

SIZE	PART NO.	DRAWING NO.	REV
B	996-0267-XX	076-0273-01	G

SCALE		SHEET
1:1	DO NOT SCALE	1 OF 1