NOTES: UNLESS OTHERWISE SPECIFIED

1. ACTIVE AREA: 240 COLUMNS X 128 ROWS
   PIXEL PITCH – COLUMN/ROW: .45
   PIXEL SIZE – COLUMN/ROW: .38
   DENSITY – COLUMN/ROW: 56.4LPI
   FILL FACTOR: 71.3%

REVISIONS

REV	REF	DESCRIPTION	DATE	REV BY	CHK BY
B	072-00	CHANGE DIMENSION AND HOLE/SLOT TOL	12JUN00	GH	
C	ECO-1944	UPDATE DIMENSION 12.4 TO 12.9	08JUN04	RD	
D	ECO-2015	ADDED TO ECO-2015 IN ERROR, NO CHANGE	26AUG04	RD	

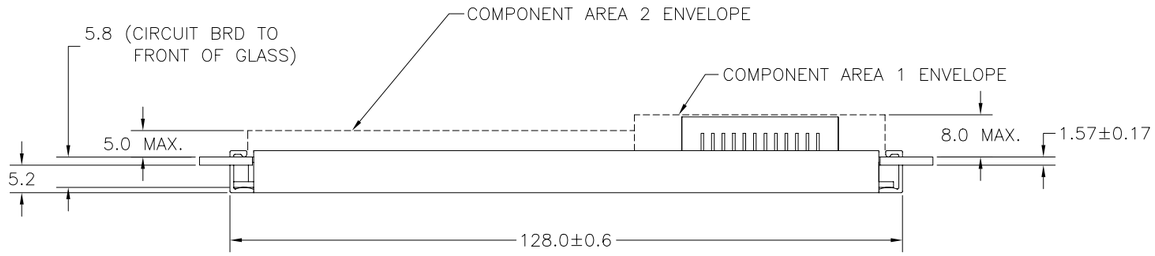

TOP VIEW

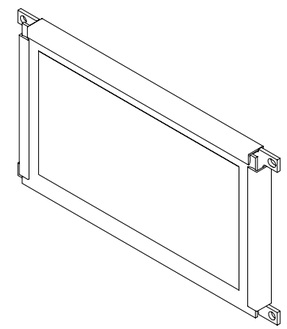

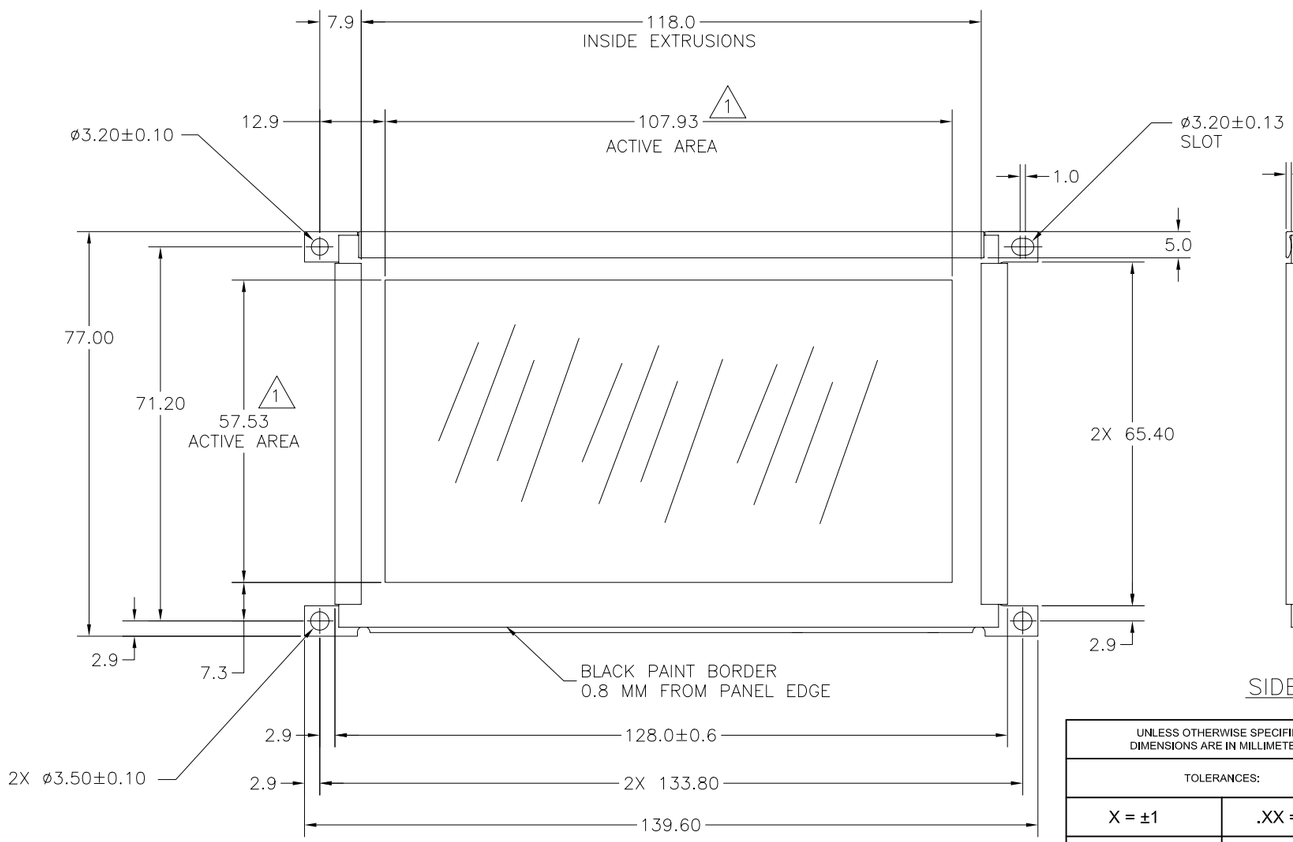

FRONT VIEW

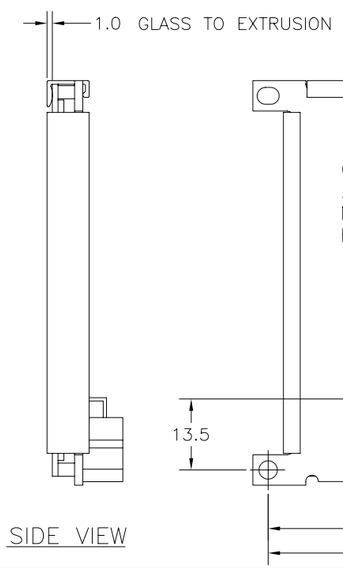

SIDE VIEW

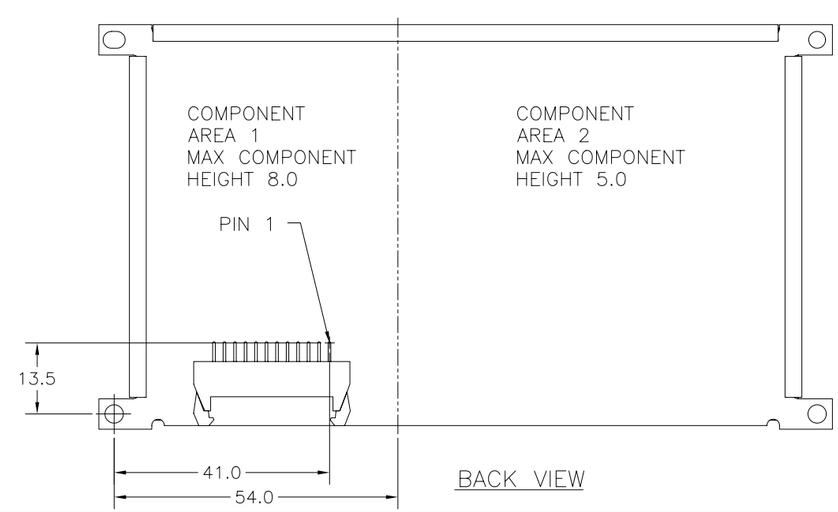

BACK VIEW

UNLESS OTHERWISE SPECIFIED DIMENSIONS ARE IN MILLIMETERS.		ENGR BY D.WEAVER	04/21/00
TOLERANCES:		DRAWN BY R.WHITFORD	04/21/00
X = ±1	.XX = ±.25	CHECKED BY D.WEAVER	04/21/00
.X = ±.5	ANGLES = ±1°	USED ON 996-0301-01	
DIMENSIONING AND TOLERANCING PER ASME Y14.5M-1994		MATERIAL NA	
THIRD ANGLE PROJECTION		FINISH NA	

PLANAR

PLANAR SYSTEMS
1195 NW COMPTON DRIVE
BEAVERTON, OR 97006 USA

TITLE

DWG, MECH O/L, 240.128.45

SIZE	PART NO.	DRAWING NO.	REV
B	076-0352-02	076-0352-02	D

SCALE		SHEET
NONE	DO NOT SCALE	1 OF 1

THIS DRAWING CONTAINS INFORMATION PROPRIETARY TO PLANAR SYSTEMS, INC., ANY REPRODUCTION IN PART OR WHOLE WITHOUT THE WRITTEN PERMISSION OF PLANAR SYSTEMS IS PROHIBITED. THIS DRAWING IS SUPPLIED FOR INFORMATION, IDENTIFICATION, ENGINEERING, EVALUATION, AND/OR INSPECTION PURPOSES ONLY AND MAY NOT BE USED AS BASIS FOR THE MANUFACTURING OF PRODUCTS OR THE FURNISHING OF SERVICES TO PLANAR SYSTEMS OR TO ANY THIRD PARTY UNLESS AUTHORIZED IN WRITING BY PLANAR SYSTEMS.