REVISIONS					
REV	REF	DESCRIPTION	DATE	REV BY	CHK BY
A	-	INITIAL RELEASE, ROLLED FROM -00A	03/01/06	RD	

NOTES:

1. LCD PANEL MODEL: AUO G150XG01.

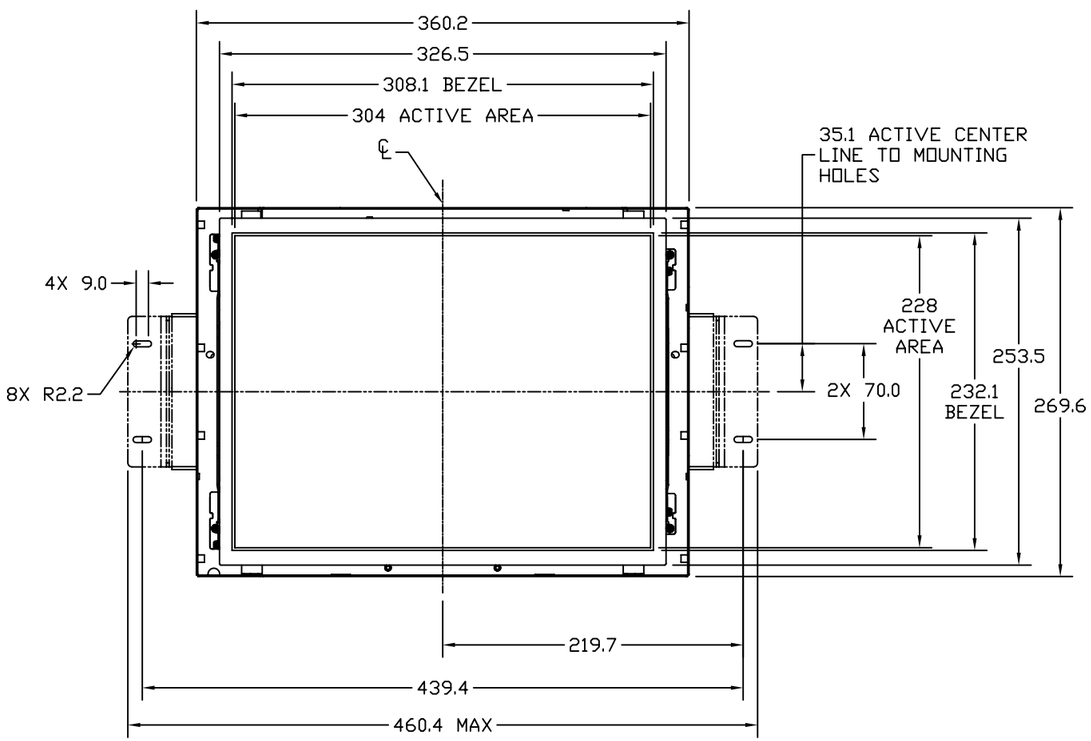

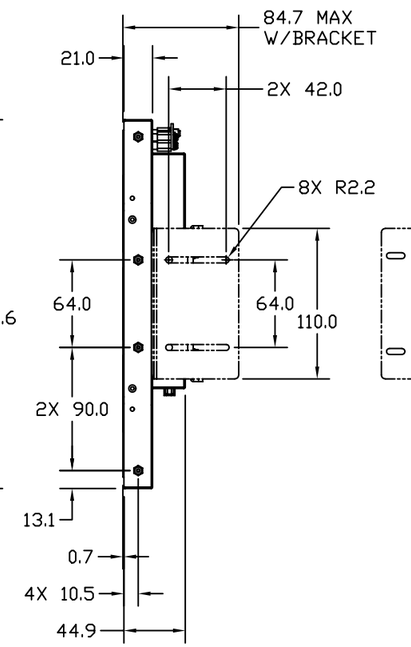

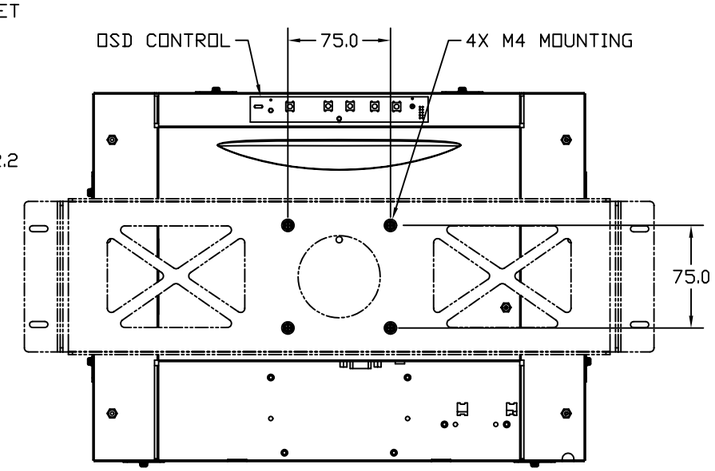

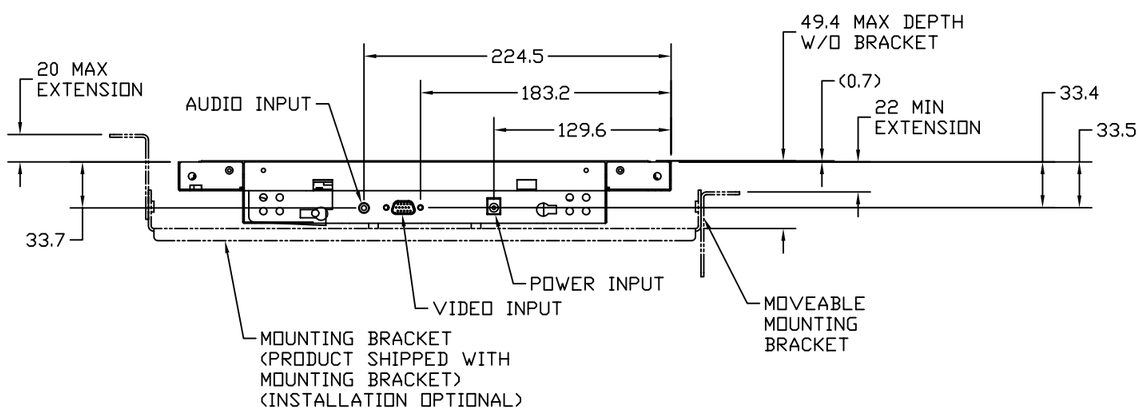

THIS DRAWING CONTAINS INFORMATION PROPRIETARY TO PLANAR SYSTEMS, INC., ANY REPRODUCTION IN PART OR WHOLE WITHOUT THE WRITTEN PERMISSION OF PLANAR SYSTEMS IS PROHIBITED. THIS DRAWING IS SUPPLIED FOR INFORMATION, IDENTIFICATION, ENGINEERING, EVALUATION, AND/OR INSPECTION PURPOSES ONLY AND MAY NOT BE USED AS BASIS FOR THE MANUFACTURING OF PRODUCTS OR THE FURNISHING OF SERVICES TO PLANAR SYSTEMS OR TO ANY THIRD PARTY UNLESS AUTHORIZED IN WRITING BY PLANAR SYSTEMS.

UNLESS OTHERWISE SPECIFIED DIMENSIONS ARE IN MILLIMETERS.		ENGR BY --	--
TOLERANCES:		DRAWN BY R.DAVENPORT	02/13/06
X = ±1	.XX = ±.13	CHECKED BY -	-
.X = ±.5	ANGLES = ±1°	USED ON 997-2806-00 (LA1500R)	
DIMENSIONING AND TOLERANCING PER ASME Y14.5M-1994		MATERIAL NA	
THIRD ANGLE PROJECTION		FINISH NA	

PLANAR

PLANAR SYSTEMS
1195 NW COMPTON DRIVE
BEAVERTON, OR 97006 USA

TITLE

MECH O/L LA1500R

SIZE	PART NO.	DRAWING NO.	REV
C	076-0590-01	076-0590-01	A
SCALE NONE	DO NOT SCALE	SHEET 1 OF 1	