REVISION HISTORY					
ECO	ZONE	REV.	DESCRIPTION	DATE	APPR'D
		B	ADDED MOUNT LOCATIONS	10/8/2020	EJS

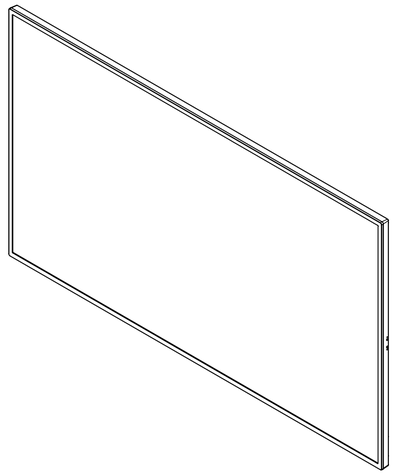

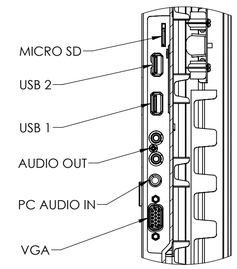

DETAIL C
SCALE 1 : 2

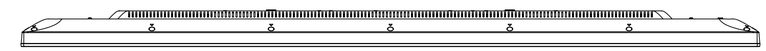

TOP VIEW

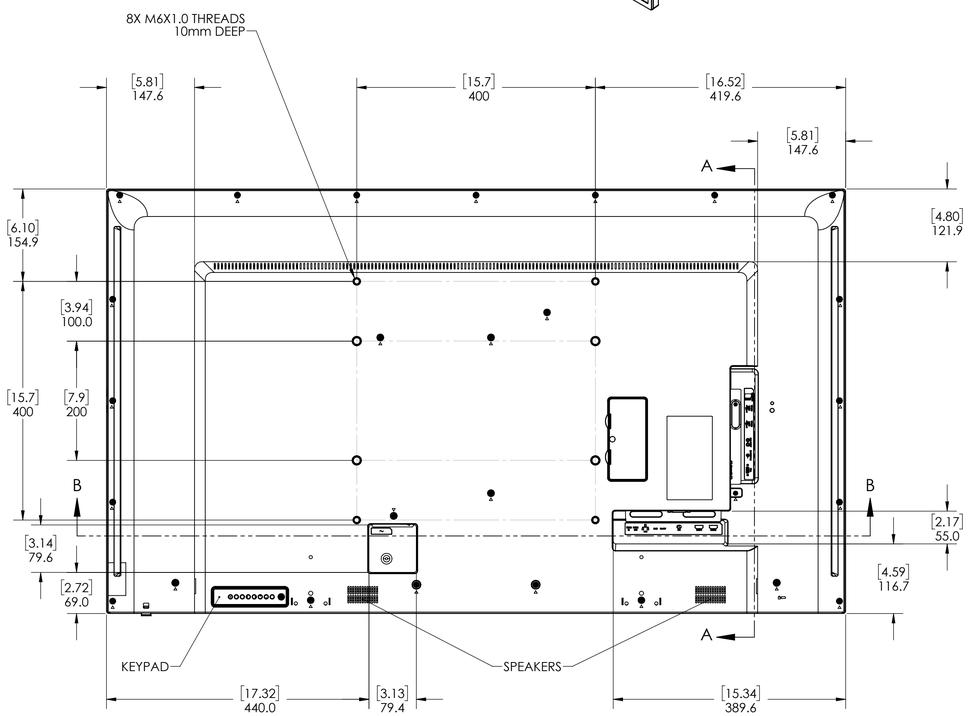

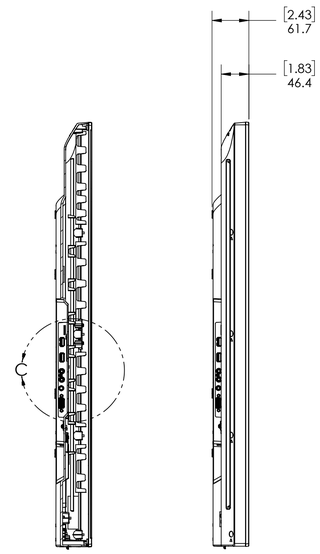

SECTION A-A

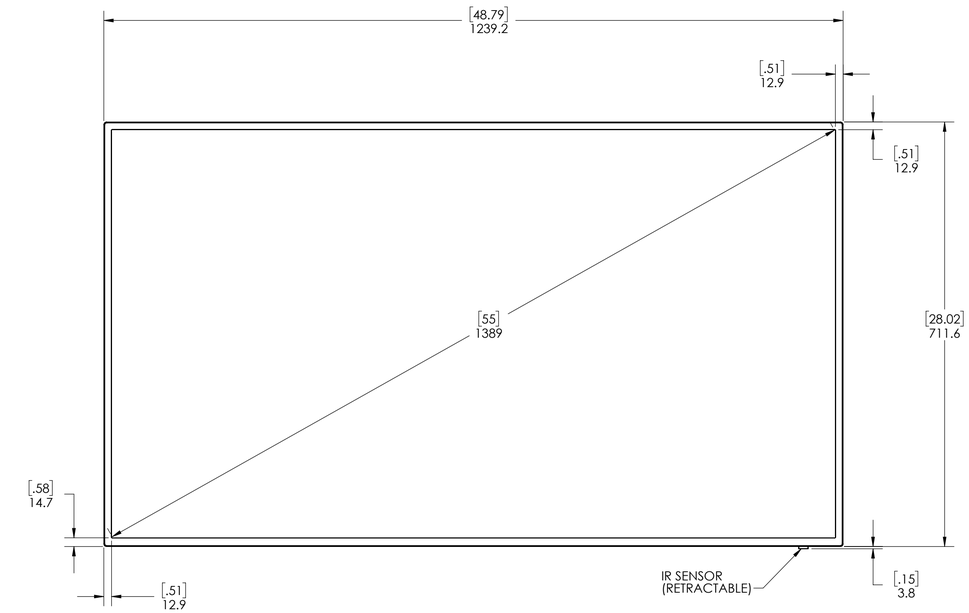

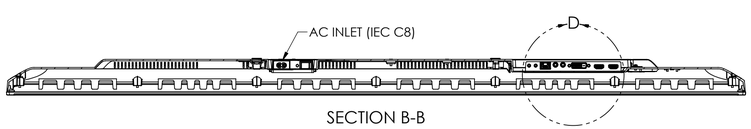

SECTION B-B

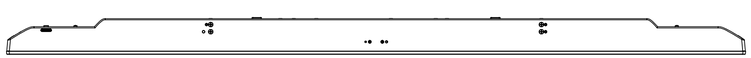

BOTTOM VIEW

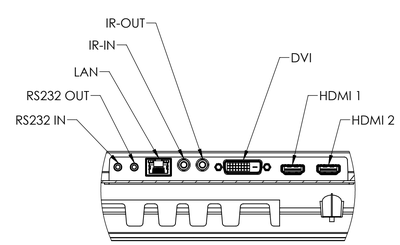

DETAIL D
SCALE 1 : 2

2. KEEP PERFORATION AREAS CLEAR FOR VENTILATION.

1. SPECIFICATIONS SUBJECT TO CHANGE WITHOUT NOTICE.

NOTES: UNLESS OTHERWISE SPECIFIED.

UNLESS OTHERWISE SPECIFIED
DIMENSIONS ARE IN MILLIMETERS [INCHES].

TOLERANCES:

X= ±1 XX= ±.25

X= ±.5 ∠= ±1°

DIMENSIONING AND TOLERANCING PER ASME Y14.5M-1994

THIRD ANGLE PROJECTION

ENGR BY		
DRAWN BY	MRW	15 Dec 17
CHECKED BY		
USED ON		
MATERIAL		
FINISH		

PLANAR

PLANAR SYSTEMS, INC.
1195 NE COMPTON DRIVE
HILLSBORO, OR 97006 USA

TITLE: SL5564K 997-9256-00

SIZE	PART NO.	DRAWING NO.	REV
D	-	SL5564K OUTLINE	B

SCALE 1:5 DO NOT SCALE SHEET 1 OF 1

THIS DRAWING CONTAINS INFORMATION PROPRIETARY TO PLANAR SYSTEMS, INC. ANY REPRODUCTION IN PART OR WHOLE WITHOUT THE WRITTEN PERMISSION OF PLANAR SYSTEMS IS PROHIBITED. THIS DRAWING IS SUPPLIED FOR INFORMATION, IDENTIFICATION, ENGINEERING, EVALUATION, AND/OR INSPECTION PURPOSES ONLY AND MAY NOT BE USED AS BASIS FOR THE MANUFACTURING OF PRODUCTS OR THE FURNISHING OF SERVICES TO PLANAR SYSTEMS OR TO ANY THIRD PARTY UNLESS AUTHORIZED IN WRITING BY PLANAR SYSTEMS.