050-0217-00 REV B

REVISION HISTORY					
ECO	ZONE	REV.	DESCRIPTION	DATE	APPR'D
7468		A	DRAWING UPDATE	6/7/2016	EPB

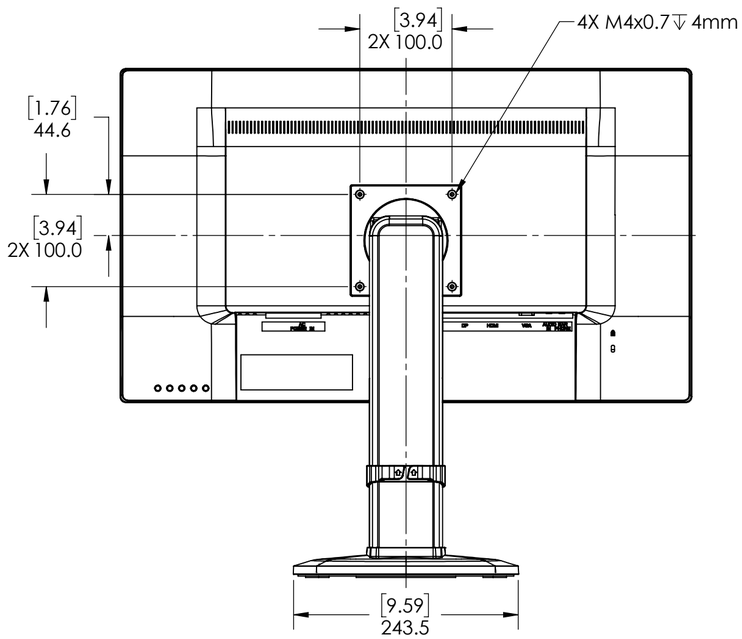

BACK SIDE

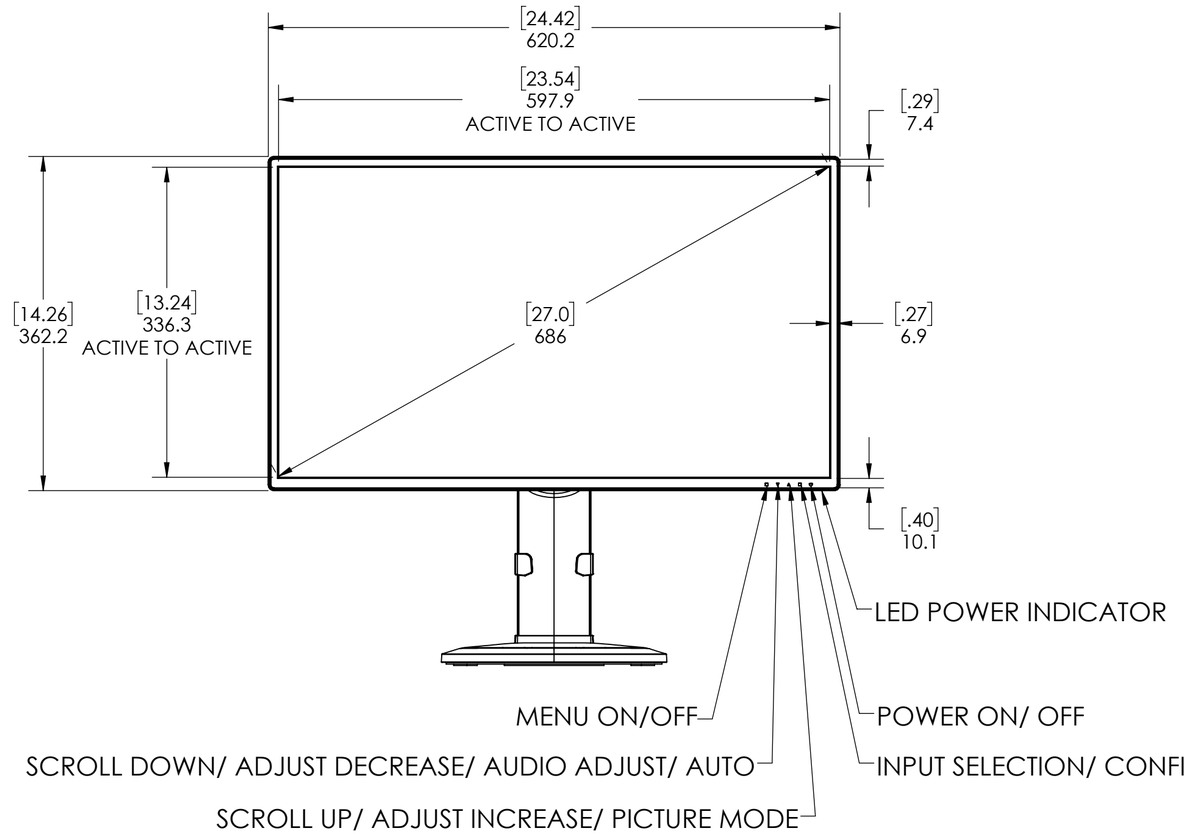

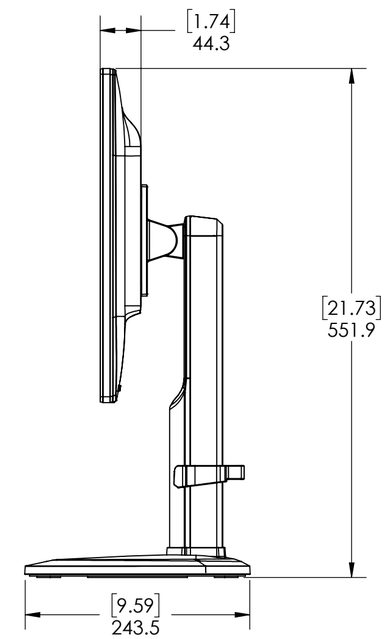

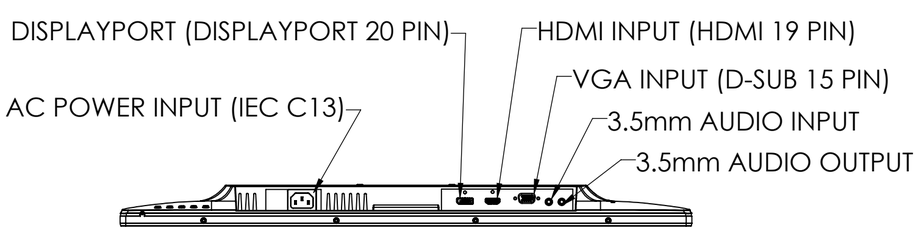

STAND REMOVED FOR CLARITY

1. SPECIFICATIONS ARE SUBJECT TO CHANGE WITHOUT NOTICE.

NOTES: UNLESS OTHERWISE SPECIFIED.

UNLESS OTHERWISE SPECIFIED DIMENSIONS ARE IN MILLIMETERS [INCHES].

TOLERANCES:

X= ±1 .XX= ±.25

.X= ±.5 ∠= ±1°

DIMENSIONING AND TOLERANCING PER ASME Y14.5M-1994

THIRD ANGLE PROJECTION

ENGR BY

DRAWN BY EPB 6JUN16

CHECKED BY

USED ON

MATERIAL

FINISH

PLANAR

PLANAR SYSTEMS, INC.
1195 NW COMPTON DRIVE
BEAVERTON, OR 97006 USA

TITLE PXN2771MW

SIZE	PART NO.	DRAWING NO.	REV
C	997-8370-00	997-8370-00	A

SCALE 1:5 DO NOT SCALE SHEET 1 OF 1

THIS DRAWING CONTAINS INFORMATION PROPRIETARY TO PLANAR SYSTEMS, INC., ANY REPRODUCTION IN PART OR WHOLE WITHOUT THE WRITTEN PERMISSION OF PLANAR SYSTEMS IS PROHIBITED. THIS DRAWING IS SUPPLIED FOR INFORMATION, IDENTIFICATION, ENGINEERING, EVALUATION, AND/OR INSPECTION PURPOSES ONLY AND MAY NOT BE USED AS BASIS FOR THE MANUFACTURING OF PRODUCTS OR THE FURNISHING OF SERVICES TO PLANAR SYSTEMS OR TO ANY THIRD PARTY UNLESS AUTHORIZED IN WRITING BY PLANAR SYSTEMS.