050-0217-00 REV B

REVISION HISTORY					
ECO	ZONE	REV.	DESCRIPTION	DATE	APPR'D
		A	PRODUCTION RELEASE	5.12.16	TL

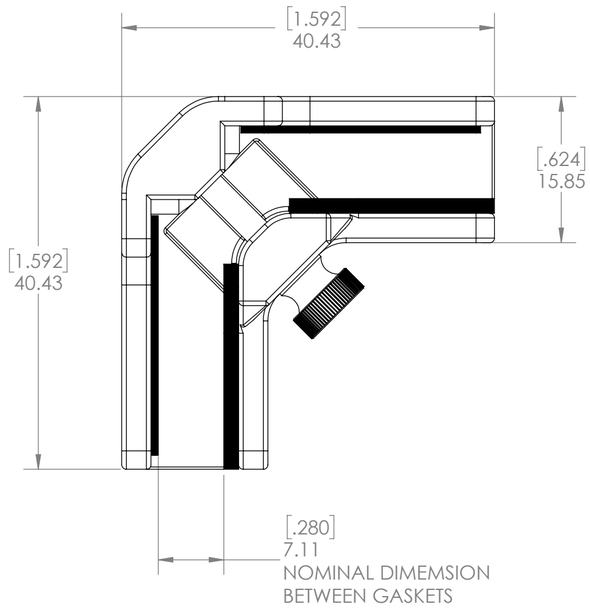

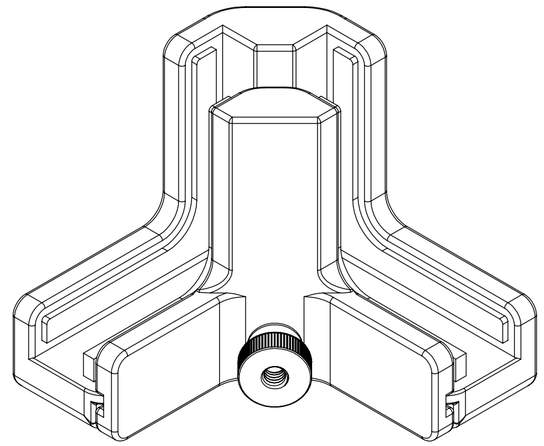

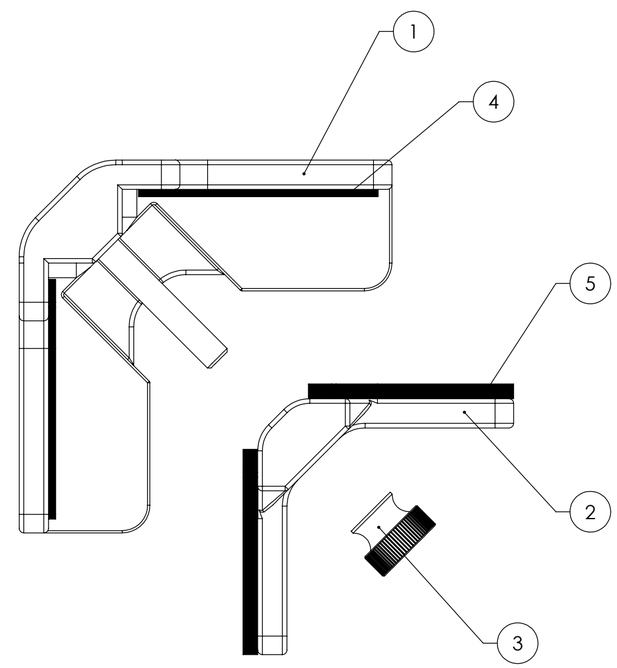

EXPLODED TOP VIEW

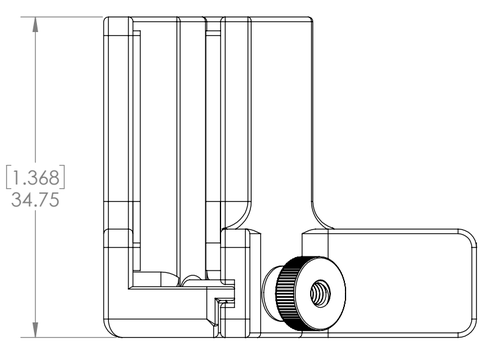

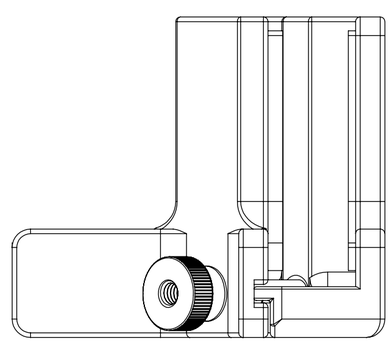

ITEM NO.	PART NUMBER	Description	QTY.
5	610-0598-00	TILING GASKET; BASK SIDE	2
4	610-0597-00	TILING GASKET; FRONT SIDE	2
3	531-0255-00	M3 Thumb Screw	1
2	502-0233-00	Tiling Hardware 8	1
1	502-0232-00	Tiling Hardware 7	1

THIS DRAWING CONTAINS INFORMATION PROPRIETARY TO PLANAR SYSTEMS, INC., ANY REPRODUCTION IN PART OR WHOLE WITHOUT THE WRITTEN PERMISSION OF PLANAR SYSTEMS IS PROHIBITED. THIS DRAWING IS SUPPLIED FOR INFORMATION, IDENTIFICATION, ENGINEERING, EVALUATION, AND/OR INSPECTION PURPOSES ONLY AND MAY NOT BE USED AS BASIS FOR THE MANUFACTURING OF PRODUCTS OR THE FURNISHING OF SERVICES TO PLANAR SYSTEMS OR TO ANY THIRD PARTY UNLESS AUTHORIZED IN WRITING BY PLANAR SYSTEMS.

UNLESS OTHERWISE SPECIFIED DIMENSIONS ARE IN MILLIMETERS [INCHES].

TOLERANCES:

X= ±1 .XX= ±.25

.X= ±.5 ∠= ±1°

DIMENSIONING AND TOLERANCING PER ASME Y14.5M-1994

THIRD ANGLE PROJECTION

ENGR BY

DRAWN BY TL 04.18.16

CHECKED BY

USED ON

MATERIAL Edge Tiling for Corner Configuration

FINISH

PLANAR SYSTEMS, INC.
1195 NW COMPTON DRIVE
BEAVERTON, OR 97006 USA

TITLE Edge Tiling for Corner Configuration

SIZE	PART NO.	DRAWING NO.	REV
C	935-0424-00	935-0424-00	A

SCALE 2:1 DO NOT SCALE SHEET 1 OF 1